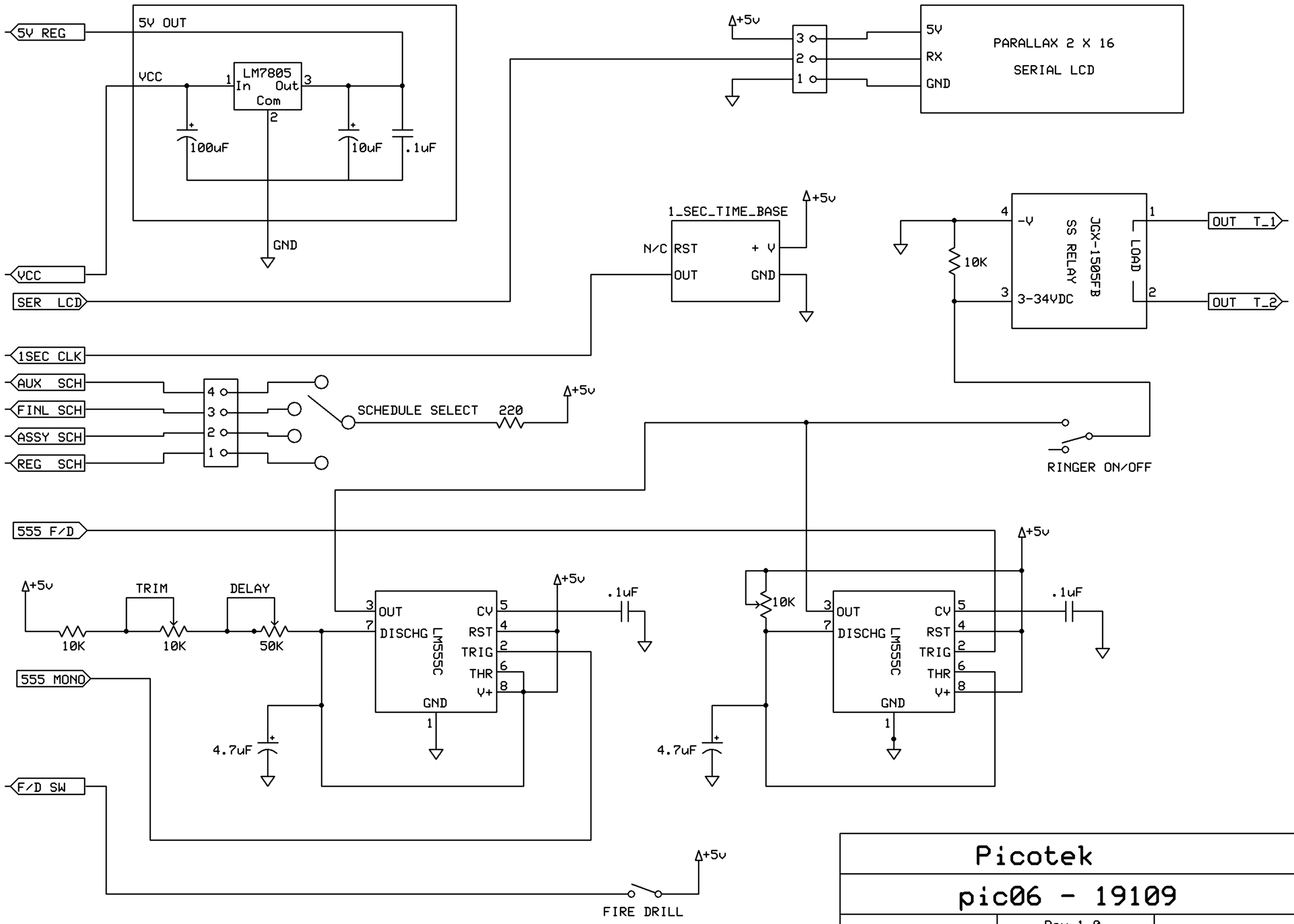

Picotek		
pic06 - 19109		
Marco Garza	Rev 1.0 1/9/2009	Page 2